PL35 (SURFACE MOUNT)

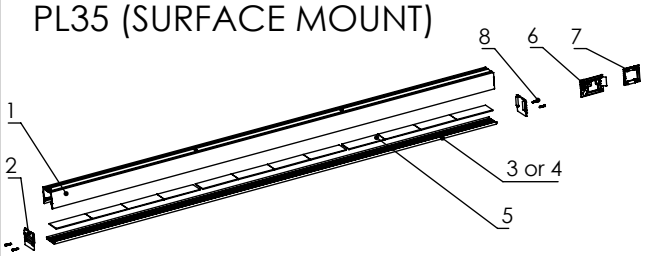

Nr	Code	Comments	Quantity
1	AL-PLA	1, 2 or 3[m]	1
2	EC-PLA	end cap	2 per 1 luminaire
3	AB-PL-K/M	diffuser 1,2 or 3[m]	
4	AL-MASS	blank aluminium diffuser	
5	30x325 PCB with Osram Duris E5 LEDs	LED	
6	90LC-PLA	90° linear connector	
7	LC-PLA	linear connector	if AL-SPL is > 3[m]
8	DIN 913 M3x4		4 per 1 connector

1

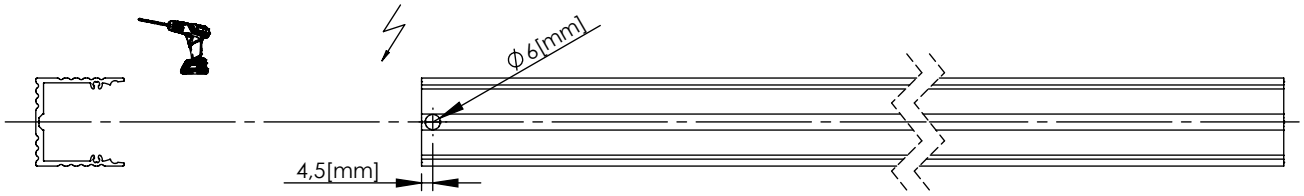

2

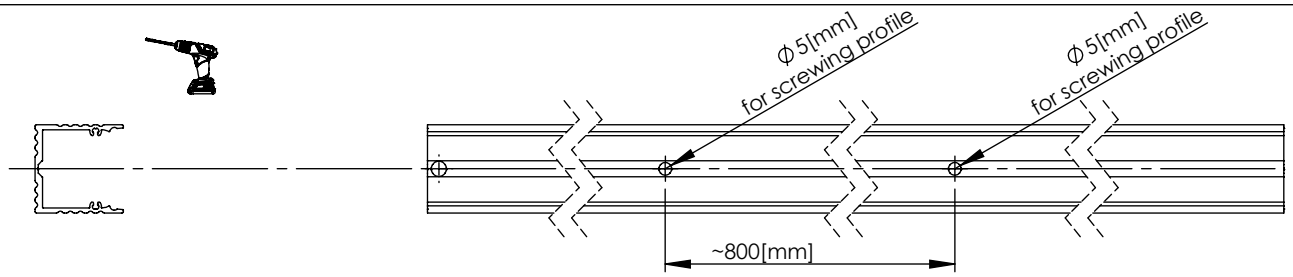

3

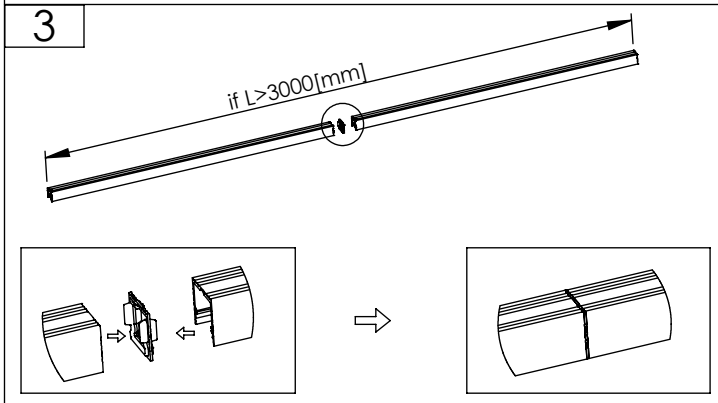

4

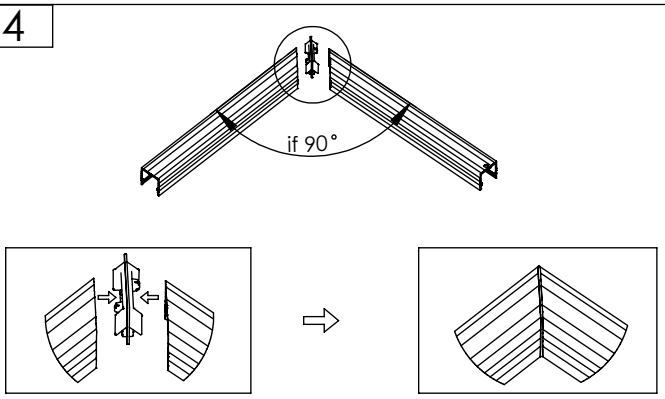

5

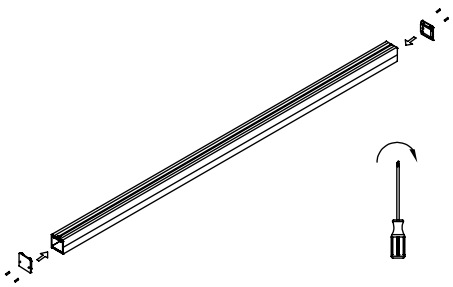

6 Use thermally conductive tape

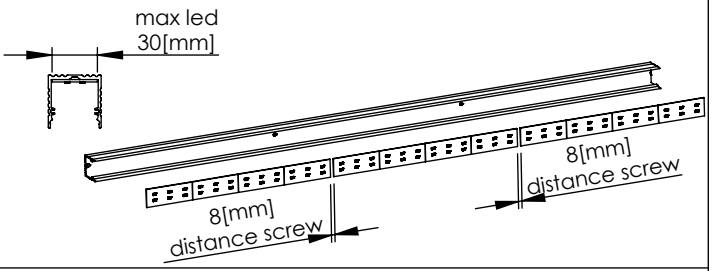

7

connect power cable

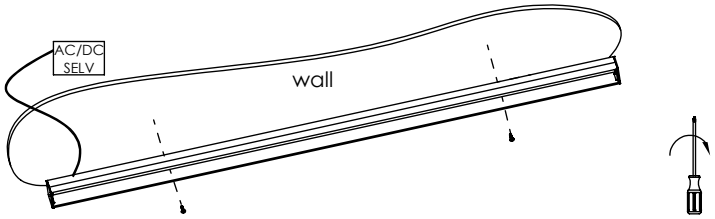

8

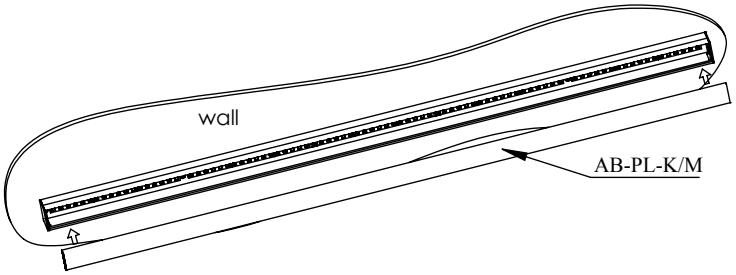

ALL RIGHTS RESERVED