ALU-COVE 2

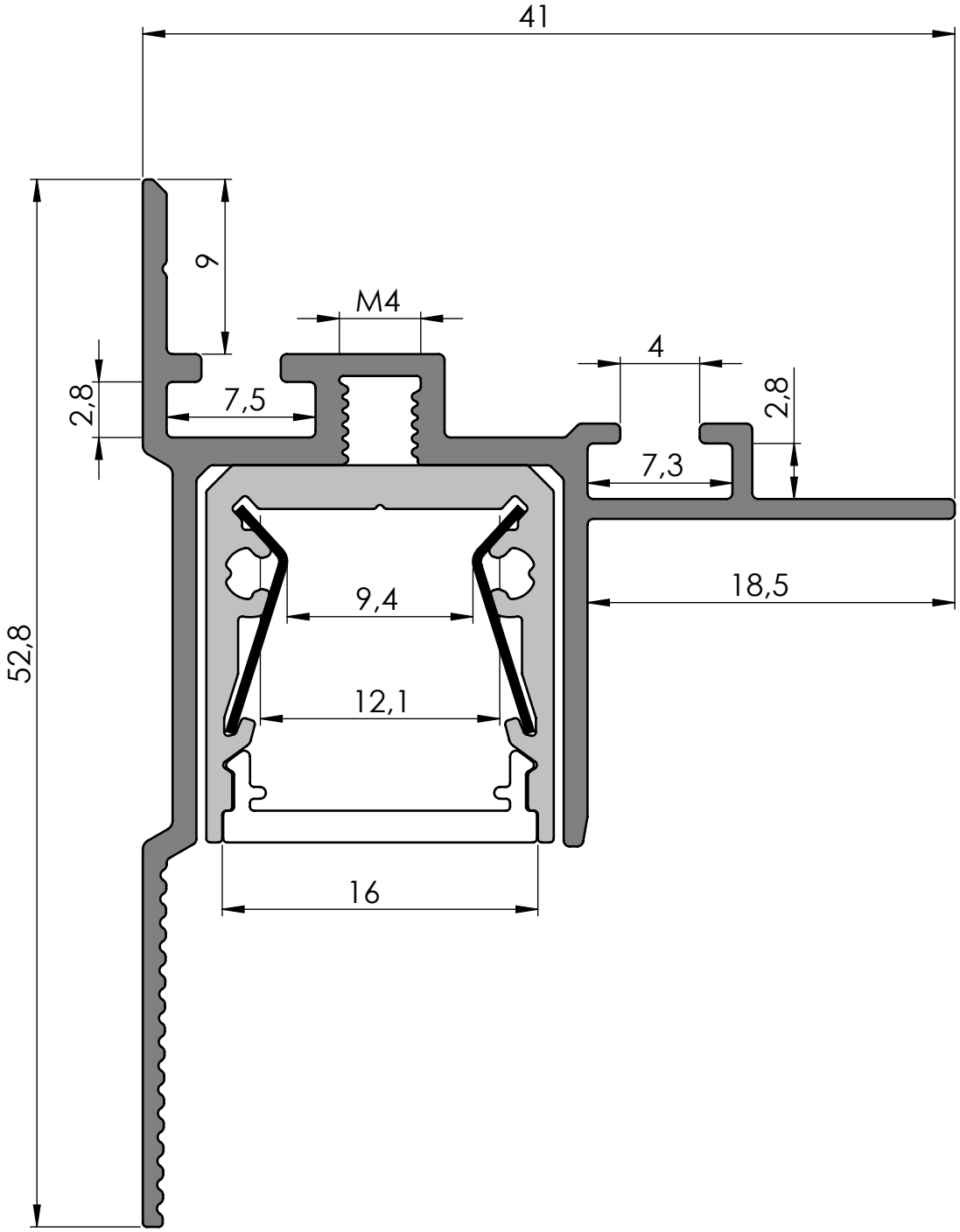

PRODUCT CODE:	AL-COVE 2		**LEDs-ON**
DESCRIPTION:	ALU-COVE 2, aluminium LED profile		**www.ledson.eu** UL. PRZEMYSLOWA 3 05-082 BLIZNE LASZCZYNSKIEGO TEL. (+48)725590651
WEIGHT: 0,42+0,24=0,66 kg/m	UNITS:	millimeters	
SCALE: 3:1	SHEET SIZE:	A4	ALL RIGHTS RESERVED