ALU-COVE 1

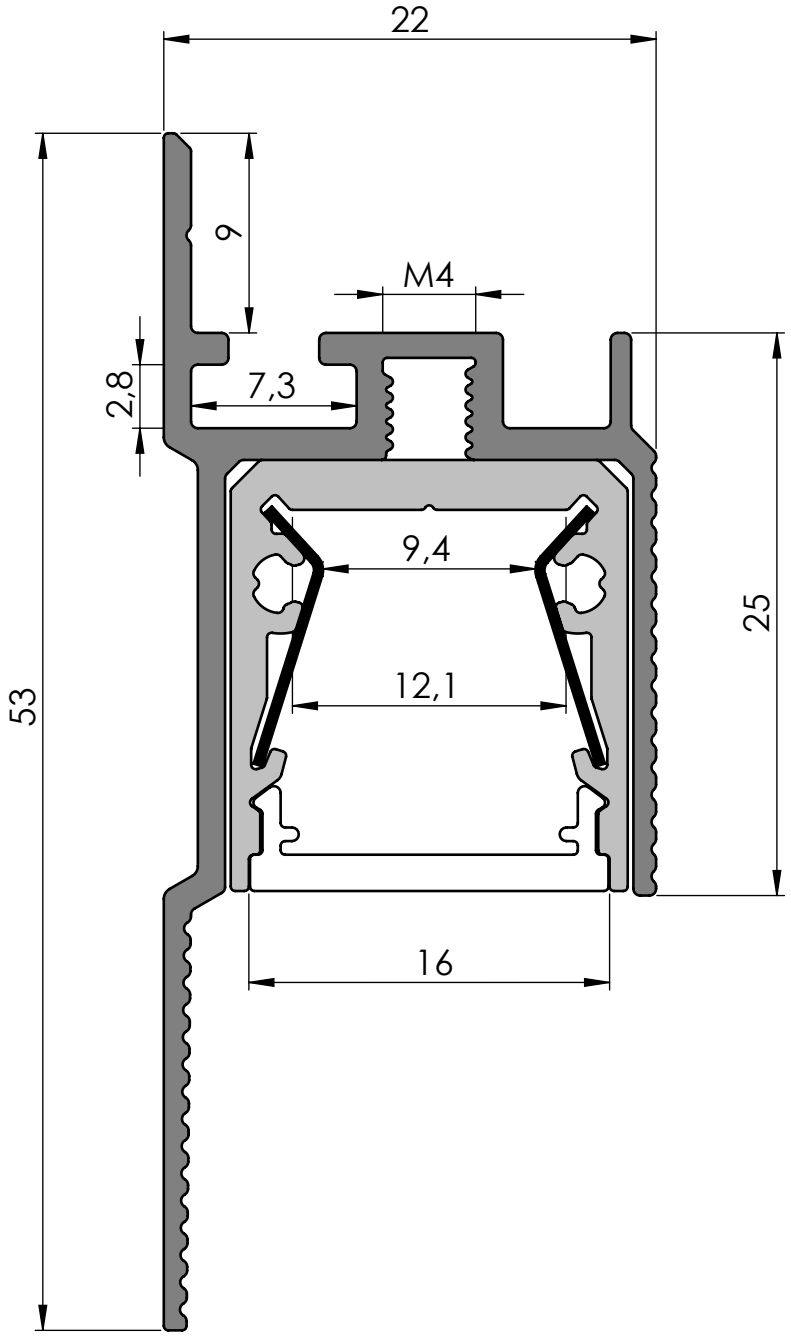

PRODUCT CODE:	AL-COVE 1		**LEDs-ON** **www.ledson.eu** UL. PRZEMYSLOWA 3 05-082 BLIZNE LASZCZYNSKIEGO TEL. (+48)725590651
DESCRIPTION:	ALU-COVE 1, aluminium LED profile		
WEIGHT:	0,34+0,24=0,58 kg/m	UNITS: millimeters	
SCALE:	3:1	SHEET SIZE: A4	ALL RIGHTS RESERVED